Dimensioning internal Locking Devices

(Clamping devices)

Company _____ Date _____

Adress _____

Contact _____ Department _____

Phone _____ FAX _____

E-Mail _____

Reference _____

TAS Schäfer GmbH
Osterfeldstraße 75
D-58300 Wetter (Ruhr)
Germany
☏ +49 (0) 2335 9781-0
🖷 +49 (0) 2335 72956
E-Mail: info@tas-schaefer.de

In order to allow us an accurate assessment/ design, please fill in all the know data.
If you are able to provide us a drawing, a sketch or similar, please send us such known information too.

Load configuration:

Motor power	p	[kW]	
Speed at LSS	n	[min^{-1}]	
Safety factor	SF		
Nominal torque	M_t	[Nm]	
Max. torque	$M_{t\,max}$	[Nm]	
Max. added radial load	F_{rad}	[N]	
Max. added bending moment	M_b	[Nm]	
Max. added axial load	F_{ax}	[N]	
Operation time		[%]	
Number of starts		[n/t]	

Device type:

Environment:

☐ corrosive

☐ Dust

Temperature range [°C]

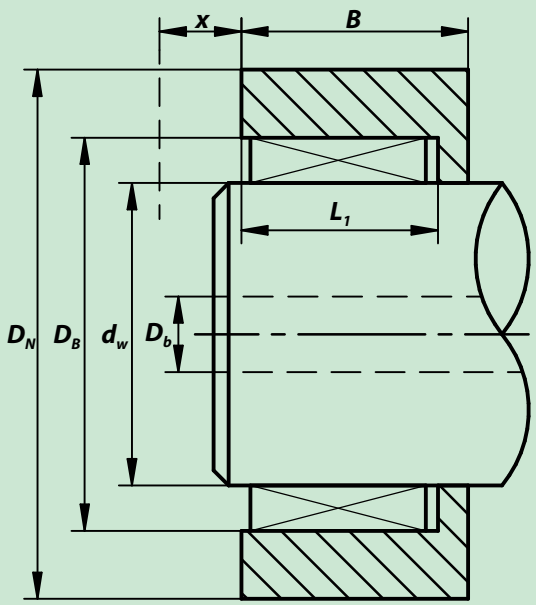

Geometric details:

Bore in the hub	D_B	[mm]		Tolerance		Rz
Shaft diameter	d_w	[mm]		Tolerance		Rz
Bore in the shaft	D_b	[mm]				
Width of the hub	B	[mm]		Installation depht	L_1	[mm]
Hub outside Ø	D_N	[mm]		available space	x	[mm]

Materials:	**Designation**	***R_e/$R_{p0,2}$* [MPa]**	***E-Modulus* [MPa]**
Shaft			
Hub			

Comments: (coatings, environmental conditions, number of tensions, special request, etc.)

Changes reserved