Änderungen vorbehalten | Changes reserved

Revision: 00

Dimensioning of Shaft Coupling Design W/WK/WLA/WLB

(Shaft - Connection)

Company _____ Date _____

Address _____

Contact _____ Department _____

Phone _____ FAX _____

E-Mail _____

Reference _____

TAS Schäfer GmbH
Osterfeldstraße 75
58300 Wetter (Ruhr)
Germany
☏ +49 (0) 2335 9781-0
🖷 +49 (0) 2335 72956
E-Mail:info@tas-schaefer.de

In order to allow us an accurate evaluation / design, please fill in all the known data.
If you are able to provide us a drawing, a sketch or similar, please send us such known information too.

Loads:

Motor power	p	[kW]	
Motor speed	n	[min^{-1}]	
Transmission ratio	i		
Drive speed	n	[min^{-1}]	
Nominal torque	M_t	[Nm]	
Max. torque	$M_{t\,max}$	[Nm]	
Safety factor	SF		
Operation time		[%]	
Number of starts		[n/t]	

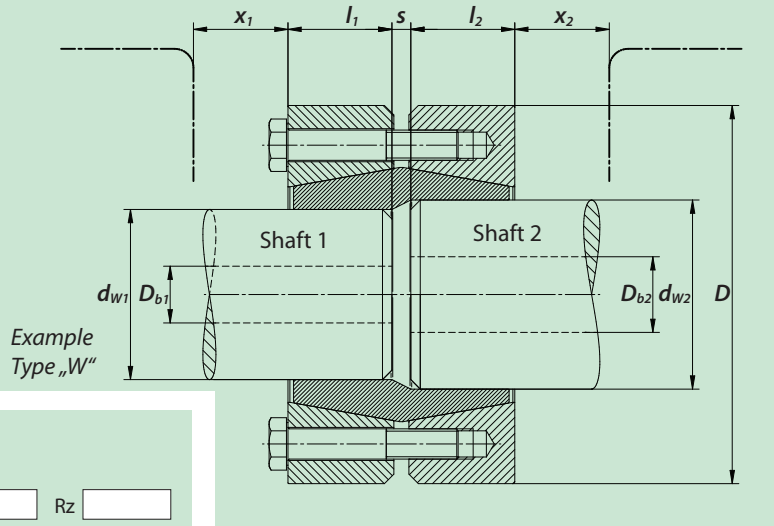

Geometric details:

Shaft 1

Shaft diameter	d_{W1}	[mm]		Tolerance		Rz
Bore in the shaft	D_{b1}	[mm]				
Material			$R_e/R_{p0,2}$ [MPa]		*E-Modulus* [MPa]	
Max. clamping length	l_1	[mm]				
available space	x_1	[mm]				

Shaft 2

Shaft diameter	d_{W2}	[mm]		Tolerance		Rz
Bore in the shaft	D_{b2}	[mm]				
Material			$R_e/R_{p0,2}$ [MPa]		*E-Modulus* [MPa]	
Max. clamping length	l_2	[mm]				
available space	x_2	[mm]				

Gap between shafts	s_{min}	[mm]		s_{max} [mm]	
Max. outer diameter	D	[mm]			

Device type:

- ◯ W
- ◯ WK
- ◯ WLA
- ◯ WLB
- ◯ Customized

Environment:

- ☐ corrosive
- ☐ Dust

Temperature range [°C] _____

Additional loads:

			static	*dynamic*
Max. bending moment	M_b	[Nm]		
Max. radial load	F_{rad}	[N]		
Max. axial load	F_{ax}	[N]		

Comments: (coatings, environmental conditions, number of tensions, special requirements, etc. ...)

Schutzvermerk nach DIN ISO 16016 beachten | Observe protection notices in accordance with DIN ISO 16016