4006

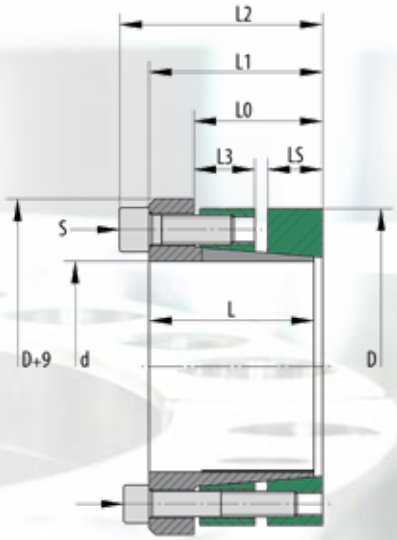

Used symbols

d	[mm]	Shaft diameter
D	[mm]	Hub inside diameter
Mt1	[Nm]	Max. transmittable torque pressure ring 1
Fax1	[kN]	Max. transmittable axial force pressure ring 1
Mt2	[Nm]	Max. transmittable torque pressure ring 2
Fax2	[kN]	Max. transmittable axial force pressue ring 2
Mt1+2	[Nm]	Entire transmittable torque Fax = 0
Fax1+2	[kN]	Entire transmittable axial force Mt = 0
pW1	[N/mm2]	Average pressure on the shaft
pN1	[N/mm2]	Average pressure on the hub 1
pW2	[N/mm2]	Average pressure on the shaft
pN2	[N/mm2]	Average pressure on the hub 2
L	[mm]	Lenght of the sleeve
L0	[mm]	Distance pressure ring 2
L1	[mm]	Width of the locking device without screws
L2	[mm]	Width of the locking device with screws
L3	[mm]	Distance pressure ring 1
LS	[mm]	Width of the pressure rings
Z1 & Z2		Number of clamping screws
S1 & S2		Size of the clamping screws
MA1 & MA2		Tightening torque of the clamping screws

Empfohlene Toleranzen & Oberflächen

Shaft	h8 / Rz 10
Hub	H8 / Rz 10

Biegebelastung

Bending moment (share)	MB max = 0,6 * Mt
Bending angle	max. 5`

More properties

- no axial displacement during assembly
- very good self-centering
- high self-locking

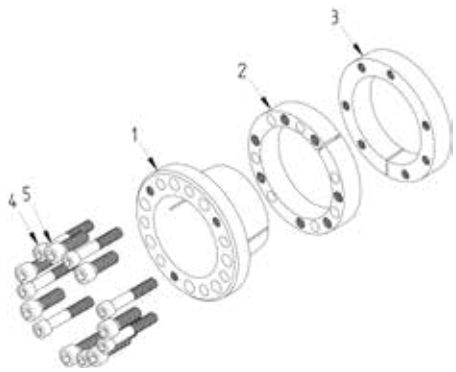

Pos.	Designation
1	Sleeve
2	Pressure ring 1
3	Pressure ring 2
4	Screw S_2
5	Screw S_1

Ordering information: **TAS 4006/d/D** (e.g: TAS 4006/030/060 ... further sizes on request)

TAS Schäfer GmbH • Osterfeldstraße 75 • 58300 Wetter

4006

d mm		D mm	M_{t1} Nm	F_{ax1} kN	M_{t2} Nm	F_{ax2} kN	M_{t1+2} Nm	F_{ax1+2} kN	p_{W1} N/mm²	p_{N1} N/mm²	p_{W2} N/mm²	p_{N2} N/mm²	Z_1 Pcs.	S_1	M_{A1} Nm	Z_2 Pcs.	S_2	M_{A2} Nm	L mm	L_0 mm	L_1 mm	L_2 mm	L_3 mm	L_s mm	Weight kg
30	x	**60**	623	42	342	23	**965**	**64**	245	124	134	67	4	M8x25	41	4	M6x40	17	45	36	48	56	18	15	0,95
35	x	**65**	727	42	499	29	**1226**	**70**	210	115	144	78	4	M8x25	41	5	M6x40	17	45	36	48	56	18	15	1,00
40	x	**70**	1039	52	570	29	**1609**	**80**	230	133	126	72	5	M8x25	41	5	M6x40	17	45	36	48	56	18	15	1,12
45	x	**80**	1516	67	1166	52	**2682**	**119**	221	126	170	95	4	M10x25	83	5	M8x50	41	54	42	57	67	21	18	1,47
50	x	**85**	2105	84	1296	52	**3401**	**136**	248	148	153	90	5	M10x25	83	5	M8x50	41	54	42	57	67	21	18	1,58
55	x	**90**	2316	84	1426	52	**3741**	**136**	226	140	139	85	5	M10x25	83	5	M8x50	41	54	42	57	67	21	18	1,70
60	x	**95**	3032	101	1866	62	**4898**	**163**	248	159	153	96	6	M10x25	83	6	M8x50	41	54	42	57	67	21	18	1,81
65	x	**100**	3284	101	2022	62	**5306**	**163**	229	151	141	92	6	M10x25	83	6	M8x50	41	54	42	57	67	21	18	1,93
70	x	**115**	5140	147	3531	101	**8672**	**248**	232	143	159	97	6	M12x35	145	6	M10x60	83	70	56	74	86	27	24	3,60
80	x	**125**	6854	171	4709	118	**11562**	**289**	237	154	163	104	7	M12x35	145	7	M10x60	83	70	56	74	86	27	24	4,00
90	x	**135**	7711	171	5297	118	**13008**	**289**	210	142	145	96	7	M12x35	145	7	M10x60	83	70	56	74	86	27	24	4,38
100	x	**150**	11498	230	8698	174	**20195**	**404**	235	159	177	118	7	M14x40	230	7	M12x70	145	78	61	82	96	29	26	6,00
110	x	**160**	12647	230	9568	174	**22215**	**404**	213	149	161	111	7	M14x40	230	7	M12x70	145	78	61	82	96	29	26	6,50
120	x	**170**	13797	230	10437	174	**24235**	**404**	196	140	148	104	7	M14x40	230	7	M12x70	145	78	61	82	96	29	26	6,97
130	x	**190**	23804	366	17342	267	**41146**	**633**	249	170	181	124	8	M16x50	355	8	M14x80	230	90	71	95	111	35	30	11,0
140	x	**200**	25635	366	18676	267	**44311**	**633**	231	162	169	118	8	M16x50	355	8	M14x80	230	90	71	95	111	35	30	11,6
150	x	**210**	27466	366	20010	267	**47476**	**633**	216	154	157	112	8	M16x50	355	8	M14x80	230	90	71	95	111	35	30	13,0
160	x	**220**	29297	366	21344	267	**50641**	**633**	202	147	147	107	8	M16x50	355	8	M14x80	230	90	71	95	111	35	30	12,3
180	x	**250**	51375	571	32959	366	**84334**	**937**	210	151	135	97	8	M20x70	690	8	M16x100	355	114	92	122	142	45	40	22,1
200	x	**270**	71355	714	45776	458	**117131**	**1171**	237	175	152	112	10	M20x70	690	10	M16x100	355	114	92	122	142	45	40	24,3
220	x	**290**	78490	714	50354	458	**128844**	**1171**	215	163	138	105	10	M20x70	690	10	M16x100	355	114	92	122	142	45	40	26,3
240	x	**310**	102751	856	65918	549	**168669**	**1406**	237	183	152	118	12	M20x70	690	12	M16x100	355	114	92	122	142	45	40	28,6
260	x	**330**	109740	844	70402	542	**180143**	**1386**	215	170	138	109	12	M20x70	690	12	M16x110	355	114	92	122	142	45	40	30,6
280	x	**365**	143639	1026	98485	703	**242124**	**1729**	216	166	148	114	10	M24x80	1200	10	M20x120	690	135	108	144	168	50	45	46,5
300	x	**385**	153899	1026	105520	703	**259419**	**1729**	202	157	138	108	10	M24x80	1200	10	M20x120	690	135	108	144	168	50	45	49,3
320	x	**405**	196991	1231	135065	844	**332056**	**2075**	227	179	155	123	12	M24x80	1200	12	M20x120	690	135	108	144	168	50	45	52
340	x	**425**	244186	1436	167425	985	**411611**	**2421**	249	199	171	137	14	M24x80	1200	14	M20x120	690	135	108	144	168	50	45	54
360	x	**445**	258550	1436	177273	985	**435823**	**2421**	235	190	161	130	14	M24x80	1200	14	M20x120	690	135	108	144	168	50	45	57
380	x	**465**	311902	1642	213853	1126	**525755**	**2767**	255	208	175	143	16	M24x80	1200	16	M20x120	690	135	108	144	168	50	45	60
400	x	**485**	328318	1642	225109	1126	**553426**	**2767**	242	200	166	137	16	M24x80	1200	16	M20x120	690	135	108	144	168	50	45	64
420	x	**505**	344734	1642	236364	1126	**581098**	**2767**	230	192	158	131	16	M24x80	1200	16	M20x120	690	135	108	144	168	50	45	66
440	x	**525**	361150	1642	247619	1126	**608769**	**2767**	168	141	115	96	16	M24x80	1200	16	M20x140	690	167	147	178	202	80	59	70
460	x	**545**	377565	1642	258875	1126	**636440**	**2767**	160	135	110	93	16	M24x80	1200	16	M20x140	690	167	147	178	202	80	59	73
480	x	**565**	393981	1642	270130	1126	**664112**	**2767**	154	131	105	90	16	M24x80	1200	16	M20x140	690	167	147	178	202	80	59	76
500	x	**585**	461697	1847	316559	1266	**778256**	**3113**	166	142	114	97	18	M24x80	1200	18	M20x140	690	167	147	178	202	80	59	79

d mm		D mm	M_{t1} Nm	F_{ax1} kN	M_{t2} Nm	F_{ax2} kN	M_{t1+2} Nm	F_{ax1+2} kN	p_{W1} N/mm²	p_{N1} N/mm²	p_{W2} N/mm²	p_{N2} N/mm²	Z_1 Pcs.	S_1	M_{A1} Nm	Z_2 Pcs.	S_2	M_{A2} Nm	L mm	L_0 mm	L_1 mm	L_2 mm	L_3 mm	L_s mm	Weight kg
520	**x**	**605**	480165	1847	329221	1266	**809386**	**3113**	160	137	109	94	18	M24x80	1200	18	M20x140	690	167	147	178	202	80	59	82
540	**x**	**625**	498633	1847	341884	1266	**840516**	**3113**	154	133	105	91	18	M24x80	1200	18	M20x140	690	167	147	178	202	80	59	85
560	**x**	**645**	517101	1847	354546	1266	**871647**	**3113**	148	129	102	88	18	M24x80	1200	18	M20x140	690	167	147	178	202	80	59	88
580	**x**	**665**	595076	2052	408009	1407	**1003085**	**3459**	159	139	109	95	20	M24x80	1200	20	M20x140	690	167	147	178	202	80	59	91
600	**x**	**685**	615596	2052	422079	1407	**1037675**	**3459**	154	135	105	92	20	M24x80	1200	20	M20x140	690	167	147	178	202	80	59	94
620	**x**	**705**	636116	2052	436148	1407	**1072264**	**3459**	149	131	102	90	20	M24x80	1200	20	M20x140	690	167	147	178	202	80	59	98