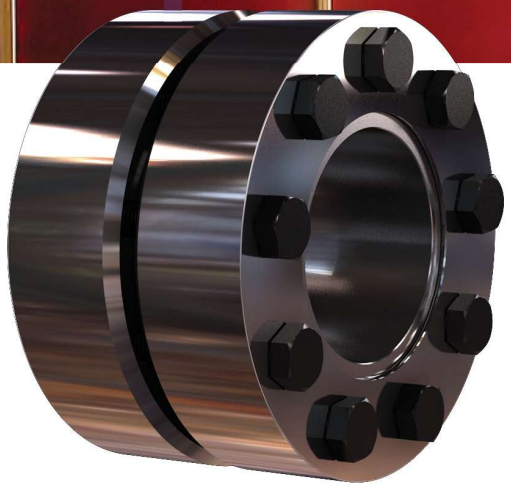

Shaft Couplings

Rigid shaft Coupling

Description of function

Rigid Shaft Coupling

The main function of the rigid shaft coupling is the safe and backlash-free connection of two shafts by means of friction. For example between a drive shaft and driven shaft and mainly to transmit torque. Shaft couplings consist of a connecting sleeve and two external clamping systems. They are not separable like flange coupling. The external clamping systems generate a backlash-free connection by pressing the connecting sleeve onto the shaft ends.

The external clamping system does not transmit any torque or moments between the shaft ends, they just provide the necessary clamping forces. Those external clamping systems are not part of the flow of forces, but the connecting sleeve is.

The couplings have to be installed by moving them onto the shaft ends followed by tightening of the external clamping systems via bolting. To achieve proper operation and a sufficiently high coefficient of friction, the contact surfaces at the shaft extensions must be free of grease, dry and clean.

Our rigid shaft couplings are supplied ready for installation. The functional surfaces of the external clamping systems, threads and head rests of the screws are provided with lubricant at the factory.

Product data

A detailed installation manual is available on the Internet.

Data Sheets

Contact us if a data sheet for an individual product is required.

• For CAD data of couplings, contact us directly, please.

Rolf Gertner
rolf.gertner@tas-schaefer.de

or

Mike Kemper
mike.kemper@tas-schaefer.de

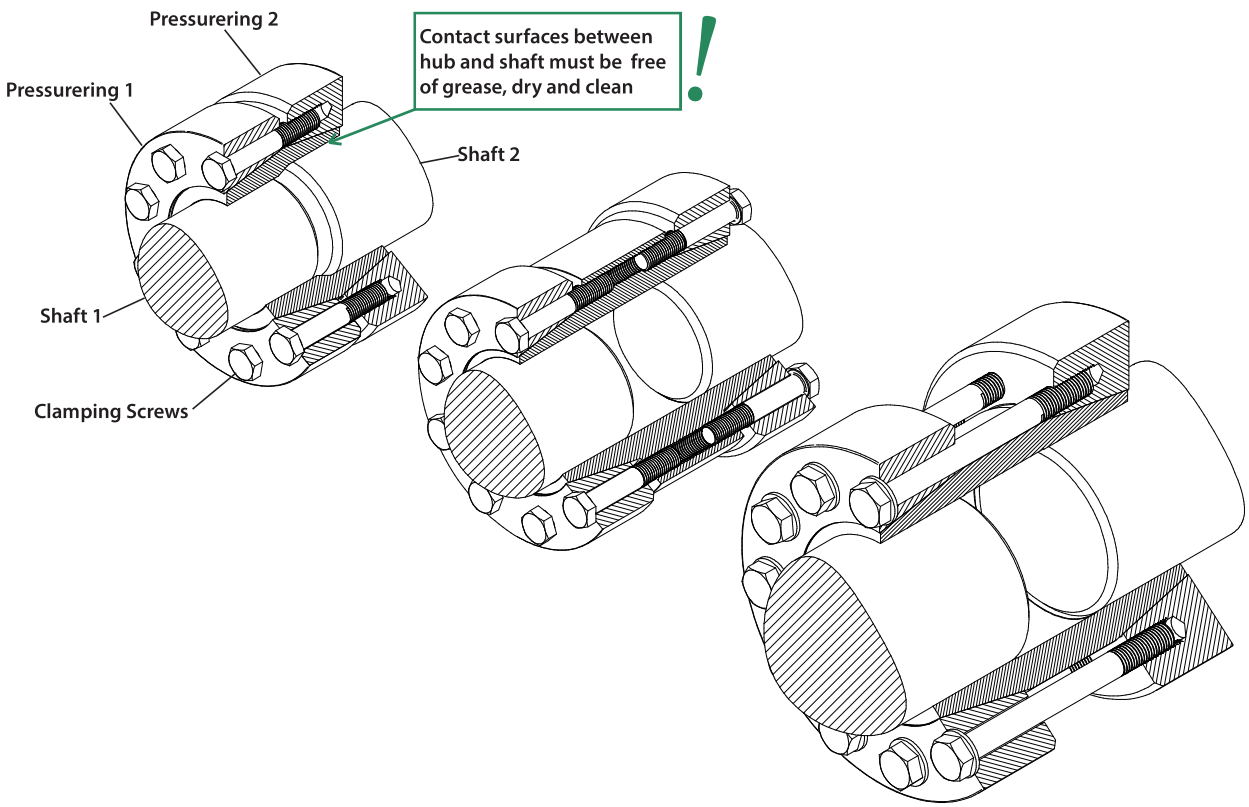

Basics-Design

Advantages and differences to other systems

Clamping length for pressure rings

The insertion depth of the shaft at the junction lK (between shaft and sleeve), should be chosen to be somewhat wider to minimize the stress concentration at this point. An excessively wide connection increases the tendency to fretting corrosion, because the pressure decreases outward. The pressure is distributed approximately at an angle between 15° - 20° through the hub. This is largely dependent on the hub wall thickness and stifness of the shaft. A good approximation can be made from the following equation:

Clamping length for pressure rings

The insertion depth of the shaft at the junction lK (between shaft and sleeve), should be chosen to be somewhat wider to minimize the stress concentration at this point. An excessively wide connection increases the tendency to fretting corrosion, because the pressure decreases outward. The pressure is distributed approximately at an angle between 15° - 20° through the hub. This is largely dependent on the hub wall thickness and stifness of the shaft. A good approximation can be made from the following equation:

Clamping length of the insertion depth:

$$l_K = 0{,}316\,(d - d_w) + l$$

The cylindrical surfaces should be located symmetrically under the shrink disc or pressure ring! With a slightly different clamping length the transmissible torque M will not change, because a smaller contact surface results in a higher pressure - also a larger contact surface causes lower pressure.

Pursue the same diameter - but an adaptation to different diameters is also possible

Basically the target should be to connect shaft ends of the same size. With larger deviations the sleeves can be adapted for the different diameters. This is done by using different pressure rings or shrink discs or bore diameter.

Tightening torque of the clamping screws

When using different pressure rings and shaft diameters, the tightening torque and therefore the clamping forces are adjustable. For example, this is also possible with soft shaft materials and reduces, if required, the stresses in the components.

$$M\,(New) = \frac{M_{Agew}}{M_A}\,M \quad \text{also}$$

$$p_N\,(New) = \frac{M_{Agew}}{M_A}\,p_N$$

The tightening torques can not be reduced arbitrary, therefore apply the following limits:

$$M_{Agew} \geq \left(\begin{array}{ll} \text{Class} & 8.8 : 0{,}85\,M_A \\ \text{Class} & 10.9 : 0{,}70\,M_A \\ \text{Class} & 12.9 : 0{,}60\,M_A \end{array} \right) \leq M_A$$

Positioning

The cylindrical connection, as well as the used clearance, allows an easy and precise positioning of the sleeves on the shaft ends. During the clamping process there is no more shift.

No hydraulic necessary

A hydraulic expansion of the hubs is not necessary for mounting.

No heating necessary

There is no need for expansion of the sleeves by heating. To increase the clearance between the shaft and sleeve, a slight warming is possible.

Shafts with keyways

The couplings can be used on shafts with keyways. As far as possible, the keyways should be closed.

Tolerances and surfaces

The values found in the product data, are based on surface quality and tolerances, according to the table below. These values are given as recommendations.

Higher surface roughness reduces the transmissible torque and promote unwanted settling.

Larger clearance also reduces the transmissible torque and increases stresses in the connecting sleeve.

If you need different shaft tolerances, please let us know. The holes in the sleeves can then be adjusted accordingly!

Recommended tolerances and surfaces roughness

>	≤	FS_{max} mm	Clearance Hub/Shaft	Rz µm
30	50	0,032	H6/h6	10
50	80	0,049	H7/h6	10
80	120	0,057	H7/h6	16
120	150	0,065	H7/h6	16
150	180	0,079	H7/g6	16
180	250	0,090	H7/g6	16
250	315	0,101	H7/g6	16
315	400	0,111	H7/g6	16
400	500	0,123	H7/g6	25
500	630	0,136	H7/g6	25

Basics-Calculation

The calculation of the values, given in the catalogue, are based on the following assumptions and simplifications:

Transmissible torque

A shrink connection is capable of transmitting torque, bending moment and axial force. Substituted, the transmissible torque M_{max} is specified in the product data. If such loads occur simultaneously then they must be added vectorially to the resultant moment M_{res}.
The formula below applies to the resulting moment:

$$M_{res} \leq M_{max}$$

At different load cases, they must be individually checked against M_{max}!

M_{res} is determined for combined loads as follows:

$$M_{res} = \sqrt{M_T^2 + 2M_B^2 + (F_{AX} \frac{dW}{2})^2}$$

with $M_B \leq 0{,}4\ M_{max}$ as the limit* for the static bending moment

*In several, the maximum bending moment corresponds to the maximum transmittable torque. The limitation to 0,4 M_{max} is due to the change of the surface pressure at the edges of the connection. (This information applies to the shrink connection of the coupling only!)

This results in the following relationships:

Torque only:
The maximum torque is equivalent to M_{max}.

Bending moment only:
The maximum static bending moment corresponds to 0,4 M_{max}.

Axial force only:
The maximum axial force is $M_{max} \frac{2}{d_W}$

Static and dynamic load

For some applications, a static review of the coupling is sufficient.
The clamping forces of the shrink connection are static. Also steady torques and/or axial forces can be considered as static loads. Rotating bending, has to be considered as dynamic load and the coupling must be examined for that. Therefore, it is also essential to specify the occurring load cases.

Shaft calculation

The sleeve will be deformed due to the applied clamping force. In addition to the clearance between shaft and sleeve, shaft stiffness and surface finish should be concidered. For solid shafts the stiffness can be ignored, but with hollow shafts (see „Bore in the shaft (hollow shaft)“) there is higher deformation and thus higher stresses in the components. This must be considered in addition to other loads.

Notch effect

Generally there is a notch effect on the components, caused by the radial pressure of the pressure ring. This depends mainly on the applied pressure. The notch effect is generally higher on the sleeve than on the shaft, because the pressure ring is directly pressed onto the sleeve, while the stresses are distributed through the sleeve before reaching the shaft. The notch factors range from 2,5 to 3,5 for the sleeve and between 1,5 and 2 for the shaft. This can be mitigated bysuitable design features, such as relief notches.

Bore in the shaft (hollow shaft)

A large bore dB in the shaft or the use of a hollow shaft, reduces the stiffness of this component against radial pressure. This leads to a decrease in pressure p_W, a reduced transmissible torque M, a contraction ΔdB within the shaft and an increase of stresses in these components. Basically, a bore should not be greater than 0,3 d_W.

W

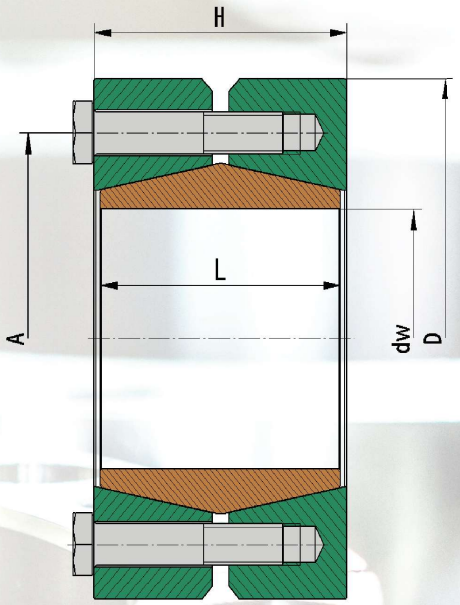

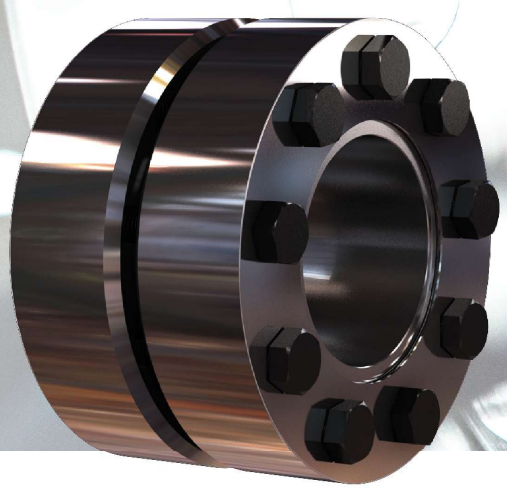

Used symbols			
d_w	[mm]	Shaft diameter	
M_{max}	[Nm]	max. transmittable torque	$F_{ax} = 0$
F_{ax}	[kN]	max. transmittable axial force	$M_t = 0$
D	[mm]	Outer diameter of coupling	
L	[mm]	Length of sleeve	
H	[mm]	Width of shaft coupling	
A	[mm]	Pitch circle diameter of bolting	
M_A		Required tightening torque of clamping screws	
Z		Number of screws	
S		Size of screws	
p_W	[N/mm²]	Average contact pressure on the shaft	

Design of the disc	
d < 070	Discs lightly oiled without washers
d ≥ 070	Discs painted with washers

Dimensions H & e in unlocked position

Pos.	Designation
1	Sleeve
2	Pressure ring G
3	Pressure ring DG
4	Screw

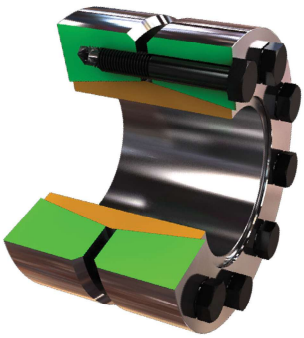

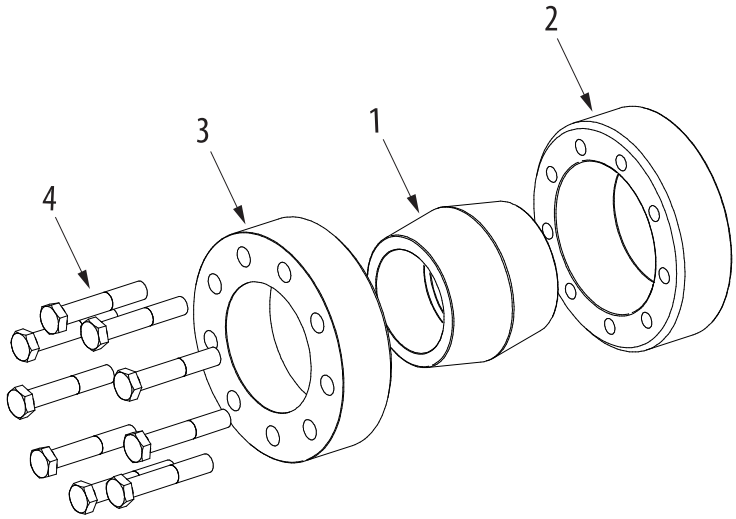

Ordering example: TAS W-Typ/d_1/ d_2 (e.g: TAS W070/065/070 ... further sizes on request)

W

Type mm	d_w mm	M_{max} Nm	F_{ax} kN	D mm	L mm	H mm	A mm	M_A mm	Z Pcs	S	DIN	Class	pw N/mm²	Weight Kg
W011	10	30	6	47	25	27	30	6	6	M5 x 20	933	10.9	150	0,4
W011	11	36	7	47	25	27	30	6	6	M5 x 20	933	10.9	189	0,4
W011	12	60	10	47	25	27	30	6	6	M5 x 20	933	10.9	222	0,4
W015	13	70	11	55	30	33	37	6	7	M5 x 25	933	10.9	83	0,5
W015	15	150	20	55	30	33	37	6	7	M5 x 25	933	10.9	126	0,5
W015	17	180	21	55	30	33	37	6	7	M5 x 25	933	10.9	160	0,5
W020	18	200	22	60	34	37	42	12	8	M6 x 30	931	10.9	213	0,7
W020	20	270	27	60	34	37	42	12	8	M6 x 30	931	10.9	241	0,7
W020	22	350	31	60	34	37	42	12	8	M6 x 30	931	10.9	266	0,7
W025	23	370	32	66	38	41	48	12	8	M6 x 30	931	10.9	178	0,8
W025	25	470	37	66	38	41	48	12	8	M6 x 30	931	10.9	197	0,8
W025	27	600	44	66	38	41	48	12	8	M6 x 30	931	10.9	214	0,8
W030	28	540	38	76	42	45	54	12	10	M6 x 35	931	10.9	215	1,3
W030	30	670	44	76	42	45	54	12	10	M6 x 35	931	10.9	217	1,3
W030	32	750	46	76	42	45	54	12	10	M6 x 35	931	10.9	231	1,3
W035	33	750	45	80	46	49	62	12	12	M6 x 35	931	10.9	168	1,5
W035	35	900	51	80	46	49	62	12	12	M6 x 35	931	10.9	180	1,5
W035	37	1050	56	80	46	49	62	12	12	M6 x 35	931	10.9	190	1,5
W040	38	1250	65	98	50	54	71	30	8	M8 x 40	931	10.9	175	2,5
W040	40	1550	77	98	50	54	71	30	8	M8 x 40	931	10.9	184	2,5
W040	43	1850	86	98	50	54	71	30	8	M8 x 40	931	10.9	196	2,5
W050	44	2200	100	115	60	64	86	59	8	M10 x 45	931	10.9	189	4
W050	50	3300	132	115	60	64	86	59	8	M10 x 45	931	10.9	200	4
W050	54	3800	140	115	60	64	86	59	8	M10 x 45	931	10.9	212	4
W060	55	4050	147	125	70	74	98	59	10	M10 x 50	931	10.9	177	5,3
W060	60	5100	170	125	70	74	98	59	10	M10 x 50	931	10.9	190	5,3
W060	64	6100	190	125	70	74	98	59	10	M10 x 50	931	10.9	198	5,3
W070	65	6500	200	148	80	85	112	59	12	M10 x 60	931	10.9	172	8,4
W070	70	8200	234	148	80	85	112	59	12	M10 x 60	931	10.9	181	8,4
W070	74	9000	243	148	80	85	112	59	12	M10 x 60	931	10.9	188	8,4
W080	75	10500	280	170	94	99	130	100	12	M12 x 70	931	10.9	73	13,1
W080	80	12300	307	170	94	99	130	100	12	M12 x 70	931	10.9	186	13,1
W080	84	14000	333	170	94	99	130	100	12	M12 x 70	931	10.9	192	13,1
W090	85	14200	334	185	104	109	145	250	7	M16 x 80	931	10.9	166	17
W090	90	16400	364	185	104	109	145	250	7	M16 x 80	931	10.9	173	17
W090	94	18000	383	185	104	109	145	250	7	M16 x 80	931	10.9	177	17
W100	80	19100	402	200	114	119	158	250	9	M16 x 90	931	10.9	200	21
W100	100	23100	462	200	114	119	158	250	9	M16 x 90	931	10.9	189	21
W100	104	26000	500	200	114	119	158	250	9	M16 x 90	931	10.9	193	21
W110	105	28500	542	217	124	129	170	250	12	M16 x 90	931	10.9	214	27
W110	110	32000	581	217	124	129	170	250	12	M16 x 90	931	10.9	218	27
W110	114	35000	614	217	124	129	170	250	12	M16 x 90	931	10.9	221	27
W120	115	38500	669	235	134	139	184	250	13	M16 x 90	931	10.9	199	33
W120	120	43500	725	235	134	139	184	250	13	M16 x 90	931	10.9	200	33
W120	124	46000	742	235	134	139	184	250	13	M16 x 90	931	10.9	204	33

W

Type mm	d_w mm	M_{max} Nm	F_{ax} kN	D mm	L mm	H mm	A mm	M_A mm	Z Pcs.	S	DIN	Class	pw N/mm²	Weight Kg
W130	125	47500	760	267	150	155	206	490	10	M20 x 110	931	10.9	195	45
W130	130	55000	846	267	150	155	206	490	10	M20 x 110	931	10.9	198	45
W130	134	58000	865	267	150	155	206	490	10	M20 x 110	931	10.9	200	45
W140	135	62000	918	280	160	165	218	490	11	M20 x 110	931	10.9	192	55
W140	140	67000	957	280	160	165	218	490	11	M20 x 110	931	10.9	195	55
W140	144	71000	986	280	160	165	218	490	11	M20 x 110	931	10.9	197	55
W150	145	73000	1006	302	170	175	230	490	12	M20 x 120	931	10.9	186	70
W150	150	78000	1040	302	170	175	230	490	12	M20 x 120	931	10.9	188	70
W150	154	82000	1065	302	170	175	230	490	12	M20 x 120	931	10.9	190	70
W160	115	82000	1058	315	180	185	242	490	13	M20 x 120	931	10.9	178	80
W160	120	88000	1100	315	180	185	242	490	13	M20 x 120	931	10.9	182	80
W160	125	97000	1175	315	180	185	242	490	13	M20 x 120	931	10.9	184	80
W180	166	108000	1301	345	200	205	265	490	16	M20 x 130	931	10.9	179	105
W180	180	132000	1465	345	200	205	265	490	16	M20 x 130	931	10.9	181	105
W180	185	140000	1513	345	200	205	265	490	16	M20 x 130	931	10.9	183	105
W200	186	153000	1645	375	225	230	295	490	20	M20 x 150	931	10.9	174	135
W200	200	184000	1840	375	225	230	295	490	20	M20 x 150	931	10.9	178	135
W200	210	204000	1943	375	225	230	295	490	20	M20 x 150	931	10.9	182	135
W220	211	214000	2028	410	253	258	320	840	18	M24 x 160	931	10.9	191	180
W220	220	240000	2180	410	253	258	320	840	18	M24 x 160	931	10.9	193	180
W220	230	260000	2260	410	253	258	320	840	18	M24 x 160	931	10.9	196	180
W240	231	280000	2424	435	273	278	350	840	20	M24 x 180	931	10.9	182	210
W240	240	305000	2540	435	273	278	350	840	20	M24 x 180	931	10.9	184	210
W240	250	334000	2672	435	273	278	350	840	20	M24 x 180	931	10.9	185	210
W260	251	390000	3108	515	300	305	380	1250	20	M27 x 200	931	10.9	204	345
W260	260	425000	3270	515	300	305	380	1250	20	M27 x 200	931	10.9	206	345
W260	270	465000	3444	515	300	305	380	1250	20	M27 x 200	931	10.9	208	345

QUALITY ON
every continent

Hydraulic Shrink Disc
for Gearbox test benches

Hydraulic Shrink Disc
for Wind power and Industrial applications

Hydraulic Shaft Coupling
for shaftings

Hydraulic Flange Coupling
for Conveyor drives

made in GERMANY

www.tas-schaefer.de
MAIL: info@tas-schaefer.de | TEL.: +49 (0) 2335 9781-0

WK

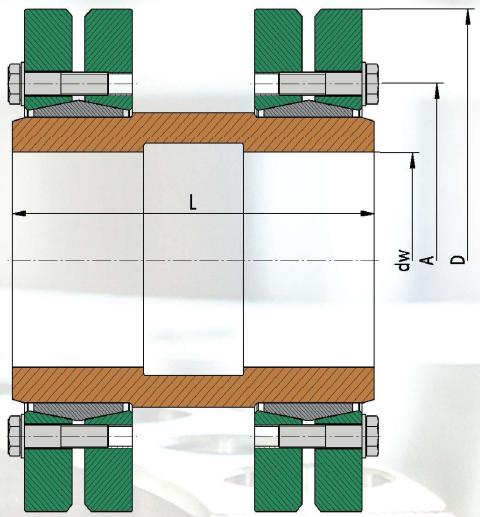

Used symbols

d_w	[mm]	Shaft diameter
M_{max}	[Nm]	max. transmittable torque $F_{ax} = 0$
F_{ax}	[kN]	max. transmittable axial force $M_t = 0$
D	[mm]	Outer diameter of coupling
L	[mm]	Length of sleeve
H	[mm]	Width of shaft coupling
A	[mm]	Pitch circle diameter of bolting
M_A		Required tightening torque of clamping screws
Z		Number of screws
S		Size of screws
p_W	[N/mm²]	Average contact pressure on the shaft

Design of the disc

d < 115	Discs galvanized without washers
d ≥ 115	Discs painted with washers

Dimensions H & e in unlocked position

Pos.	Designation
1	Sleeve
2	Shrink Disc
3	Shrink Disc

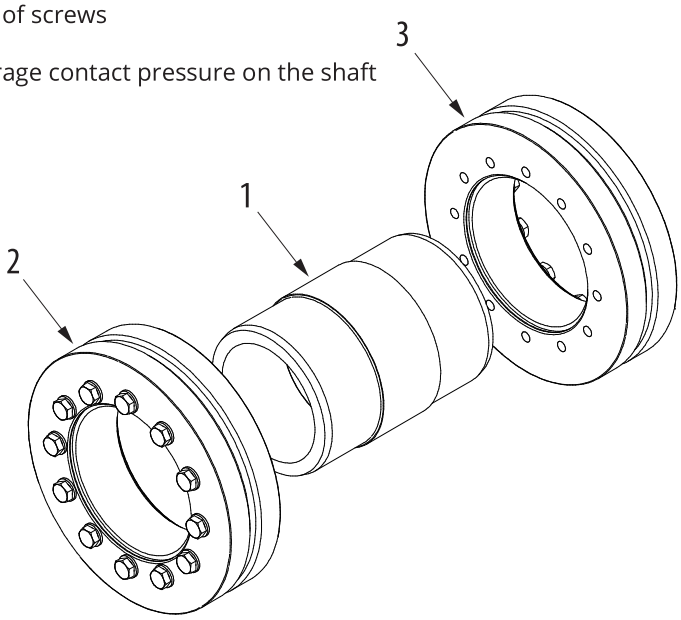

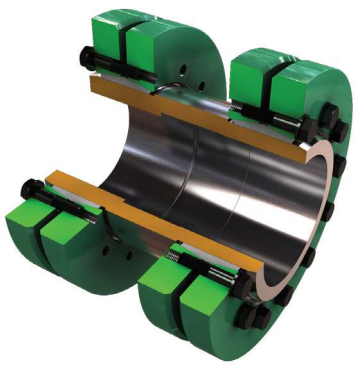

Ordering example: **TAS WK-Typ/d/D** (e.g: TAS WK 240/150/200 ... further sizes on request)

WK

Type mm	d_w mm	M_{max} Nm	F_{ax} kN	D mm	L mm	A mm	M_A mm	Z Pcs.	S	DIN	Class	pw N/mm²	Weight Kg
WK024	19	250	26	50	50	36	6	6	M5	933	10.9	235	0,7
WK024	20	300	30	50	50	36	6	6	M5	933	10.9	254	0,7
WK024	21	360	34	50	50	36	6	6	M5	933	10.9	273	0,7
WK030	24	310	26	60	55	44	6	6	M5	933	10.9	159	1
WK030	25	360	29	60	55	44	6	6	M5	933	10.9	171	1
WK030	26	420	32	60	55	44	6	6	M5	933	10.9	183	1
WK036	28	500	36	72	65	52	12	5	M6	933	10.9	169	1,3
WK036	30	640	43	72	65	52	12	5	M6	933	10.9	186	1,3
WK036	31	690	45	72	65	52	12	5	M6	933	10.9	189	1,3
WK044	34	880	52	80	70	61	12	7	M6	933	10.9	178	2
WK044	35	970	55	80	70	61	12	7	M6	933	10.9	185	2
WK044	36	1000	56	80	70	61	12	7	M6	933	10.9	192	2
WK050	38	1000	53	90	80	70	12	8	M6	931	10.9	161	2,5
WK050	40	1200	60	90	80	70	12	8	M6	931	10.9	172	2,5
WK050	42	1500	71	90	80	70	12	8	M6	931	10.9	182	2,5
WK055	42	1200	57	100	85	75	12	8	M6	931	10.9	139	3,5
WK055	45	1500	67	100	85	75	12	8	M6	931	10.9	152	3,5
WK055	48	1800	75	100	85	75	12	8	M6	931	10.9	164	3,5
WK062	48	1900	79	110	90	86	12	10	M6	931	10.9	168	4
WK062	50	2100	84	110	90	86	12	10	M6	931	10.9	174	4
WK062	52	2200	85	110	90	86	12	10	M6	931	10.9	171	4
WK068	50	1700	68	115	100	86	12	10	M6	931	10.9	145	4,5
WK068	55	2200	80	115	100	86	12	10	M6	931	10.9	148	4,5
WK068	60	2900	97	115	100	86	12	10	M6	931	10.9	166	4,5
WK075	55	2800	102	138	120	100	30	7	M8	931	10.9	175	5
WK075	60	3600	120	138	120	100	30	7	M8	931	10.9	192	5
WK075	65	4600	142	138	120	100	30	7	M8	931	10.9	207	5
WK080	60	3200	107	145	130	100	30	7	M8	931	10.9	168	6
WK080	65	4100	126	145	130	100	30	7	M8	931	10.9	182	6
WK080	70	5100	146	145	130	100	30	7	M8	931	10.9	195	6
WK090	65	4900	151	155	140	114	30	10	M8	931	10.9	181	11
WK090	70	6000	171	155	140	114	30	10	M8	931	10.9	192	11
WK090	75	7300	195	155	140	114	30	10	M8	931	10.9	203	11
WK100	70	6000	171	170	160	124	30	12	M8	931	10.9	170	15
WK100	75	7300	195	170	160	124	30	12	M8	931	10.9	180	15
WK100	80	8800	220	170	160	124	30	12	M8	931	10.9	189	15
WK110	75	7400	197	185	180	136	59	9	M10	931	10.9	159	19
WK110	80	8900	223	185	180	136	59	9	M10	931	10.9	168	19
WK110	85	10300	242	185	180	136	59	9	M10	931	10.9	171	19
WK125	85	11100	261	215	200	160	59	12	M10	931	10.9	172	26
WK125	90	13100	291	215	200	160	59	12	M10	931	10.9	180	26
WK125	95	15200	320	215	200	160	59	12	M10	931	10.9	188	26
WK140	95	15500	326	230	210	175	100	10	M12	931	10.9	175	34
WK140	100	17900	358	230	210	175	100	10	M12	931	10.9	182	34
WK140	105	20400	389	230	210	175	100	10	M12	931	10.9	188	34

WK

Type mm	d_w mm	M_{max} Nm	F_{ax} kN	D mm	L mm	A mm	M_A mm	Z Pcs.	S	DIN	Class	pw N/mm²	Weight Kg
WK155	105	21100	402	265	230	192	100	12	M12	931	10.9	179	50
WK155	110	23900	435	265	230	192	100	12	M12	931	10.9	185	50
WK155	115	26900	468	265	230	192	100	12	M12	931	10.9	190	50
WK165	115	34800	605	290	240	210	250	8	M16	931	10.9	219	65
WK165	120	38700	645	290	240	210	250	8	M16	931	10.9	224	65
WK165	125	42300	677	290	240	210	250	8	M16	931	10.9	226	65
WK175	125	38600	618	300	250	220	250	8	M16	931	10.9	206	68
WK175	130	42600	655	300	250	220	250	8	M16	931	10.9	211	68
WK175	135	46900	695	300	250	220	250	8	M16	931	10.9	215	68
WK185	135	53700	796	330	265	236	250	10	M16	931	10.9	194	100
WK185	140	59000	843	330	265	236	250	10	M16	931	10.9	198	100
WK185	145	64400	888	330	265	236	250	10	M16	931	10.9	202	100
WK195	140	67200	960	350	280	246	250	12	M16	931	10.9	226	110
WK195	150	79500	1060	350	280	246	250	12	M16	931	10.9	233	110
WK195	155	84800	1094	350	280	246	250	12	M16	931	10.9	232	110
WK200	150	76700	1023	350	290	246	250	12	M16	931	10.9	224	125
WK200	155	81700	1054	350	290	246	250	12	M16	931	10.9	224	125
WK200	160	88400	1105	350	290	246	250	12	M16	931	10.9	227	125
WK220	160	95800	1198	370	310	270	250	15	M16	931	10.9	199	155
WK220	165	103000	1248	370	310	270	250	15	M16	931	10.9	202	155
WK220	170	111000	1306	370	310	270	250	15	M16	931	10.9	205	155
WK240	170	126000	1482	405	350	295	490	12	M20	931	10.9	221	190
WK240	180	144000	1600	405	350	295	490	12	M20	931	10.9	227	190
WK240	190	163000	1716	405	350	295	490	12	M20	931	10.9	230	190
WK260	190	170000	1789	430	390	321	490	14	M20	931	10.9	214	240
WK260	200	193000	1930	430	390	321	490	14	M20	931	10.9	219	240
WK260	210	217000	2067	430	390	321	490	14	M20	931	10.9	224	240
WK280	210	224000	2133	460	430	346	490	16	M20	931	10.9	209	290
WK280	220	251000	2282	460	430	346	490	16	M20	931	10.9	213	290
WK280	230	280000	2435	460	430	346	490	16	M20	931	10.9	217	290
WK300	230	287000	2496	485	445	364	490	18	M20	931	10.9	208	340
WK300	240	318000	2650	485	445	364	490	18	M20	931	10.9	211	340
WK300	245	334000	2727	485	445	364	490	18	M20	931	10.9	213	340
WK320	240	326000	2717	520	460	386	490	20	M20	931	10.9	217	380
WK320	250	359000	2872	520	460	386	490	20	M20	931	10.9	220	380
WK320	260	391000	3008	520	460	386	490	20	M20	931	10.9	222	380
WK340	250	401000	3208	570	480	408	490	24	M20	931	10.9	224	500
WK340	260	435000	3346	570	480	408	490	24	M20	931	10.9	225	500
WK340	270	476000	3526	570	480	408	490	24	M20	931	10.9	228	500
WK350	270	456000	3378	580	490	432	490	24	M20	931	10.9	209	530
WK350	280	497000	3550	580	490	432	490	24	M20	931	10.9	212	530
WK350	285	518000	3635	580	490	432	490	24	M20	931	10.9	213	530
WK360	280	478000	3414	590	500	432	490	24	M20	931	10.9	203	550
WK360	290	519000	3579	590	500	432	490	24	M20	931	10.9	206	550
Wk360	295	541000	3668	590	500	432	490	24	M20	931	10.9	207	550

WK

Type mm	d_w mm	M_{max} Nm	F_{ax} kN	D mm	L mm	A mm	M_A mm	Z Pcs.	S	DIN	Class	pw N/mm²	Weight Kg
WK380	290	587000	4048	645	530	458	840	20	M24	931	10.9	226	660
WK380	300	635000	4233	645	530	458	840	20	M24	931	10.9	229	660
WK380	310	685000	4419	645	530	458	840	20	M24	931	10.9	231	660
WK390	300	646000	4307	660	540	468	840	21	M24	931	10.9	233	720
WK390	310	697000	4497	660	540	468	840	21	M24	931	10.9	235	720
WK390	320	746000	4663	660	540	468	840	21	M24	931	10.9	236	720
WK420	330	831000	5036	690	580	504	840	24	M24	931	10.9	217	860
WK420	340	891000	5241	690	580	504	840	24	M24	931	10.9	219	860
WK420	350	953000	5446	690	580	504	840	24	M24	931	10.9	221	860
WK440	340	832000	4894	750	600	527	840	24	M24	931	10.9	190	990
WK440	350	891000	5091	750	600	527	840	24	M24	931	10.9	192	990
WK440	360	952000	5289	750	600	527	840	24	M24	931	10.9	194	990
WK460	360	1058000	5878	770	620	547	840	28	M24	931	10.9	216	1100
WK460	370	1127000	6092	770	620	547	840	28	M24	931	10.9	217	1100
WK460	380	1198000	6305	770	620	547	840	28	M24	931	10.9	219	1100
WK480	380	1216000	6400	800	645	570	840	30	M24	931	10.9	209	1300
WK480	390	1290000	6615	800	645	570	840	30	M24	931	10.9	211	1300
WK480	400	1367000	6835	800	645	570	840	30	M24	931	10.9	212	1300
WK500	400	1358000	6790	850	670	590	1250	24	M27	931	10.9	211	1480
WK500	410	1431000	6980	850	670	590	1250	24	M27	931	10.9	211	1480
WK500	420	1513000	7205	850	670	590	1250	24	M27	931	10.9	213	1480

WLA

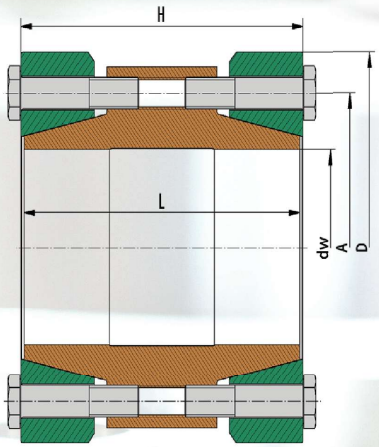

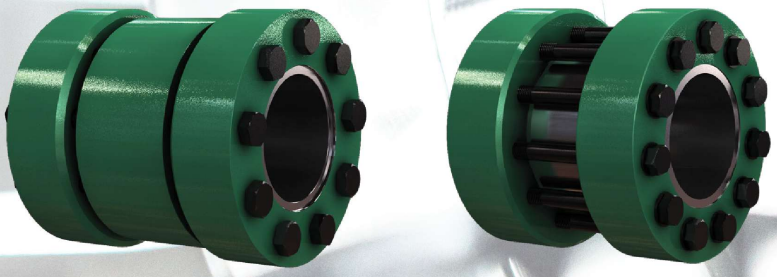

Also available as „WLB“ version!

Used symbols			
d_w	[mm]	Shaft diameter	
M_{max}	[Nm]	max. transmittable torque	$F_{ax} = 0$
F_{ax}	[kN]	max. transmittable axial force	$M_t = 0$
D	[mm]	Outer diameter of coupling	
L	[mm]	Length of sleeve	
H	[mm]	Width of shaft coupling	
A	[mm]	Pitch circle diameter of bolting	
M_A		Required tightening torque of clamping screws	
Z		Number of screws	
S		Size of screws	
p_W	[N/mm²]	Average contact pressure on the shaft	

Design of the disc	
d < 070	Discs lightly oiled without washers
d ≥ 070	Discs painted with washers

Dimensions H & e in unlocked position

Pos.	Designation
1	Sleeve
2	Pressure ring DG
3	Pressure ring DG
4	Screw

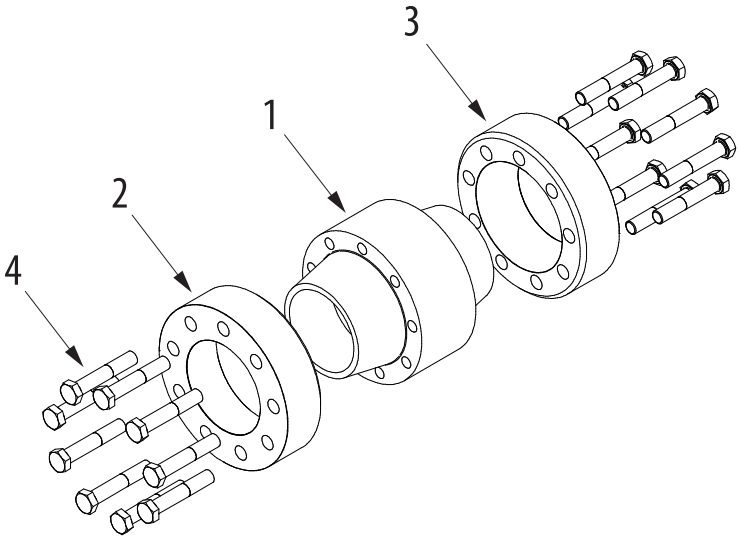

Ordering example: TAS WLA-Typ/d/D (e.g: TAS WLA200/150/200 ... further sizes on request)

WLA

Type mm	d_w mm	M_{max} Nm	F_{ax} kN	D mm	L mm	H mm	A mm	M_A mm	Z Pcs (2x)	S	DIN	Class	pw N/mm²	Weight Kg
WLA015	13	70	11	55	50	53	37	6	7	M5 x 25	933	10.9	83	0,5
WLA015	15	150	20	55	50	53	37	6	7	M5 x 25	933	10.9	126	0,5
WLA015	17	180	21	55	50	53	37	6	7	M5 x 25	933	10.9	160	0,5
WLA020	18	200	22	60	54	57	42	12	8	M6 x 30	931	10.9	213	0,7
WLA020	20	270	27	60	54	57	42	12	8	M6 x 30	931	10.9	241	0,7
WLA020	22	350	31	60	54	57	42	12	8	M6 x 30	931	10.9	266	0,7
WLA025	23	370	32	66	62	65	48	12	8	M6 x 30	931	10.9	178	0,8
WLA025	25	470	37	66	62	65	48	12	8	M6 x 30	931	10.9	197	0,8
WLA025	27	600	44	66	62	65	48	12	8	M6 x 30	931	10.9	214	0,8
WLA030	28	540	38	76	70	73	54	12	10	M6 x 35	931	10.9	164	1,3
WLA030	30	670	44	76	70	73	54	12	10	M6 x 35	931	10.9	165	1,3
WLA030	32	750	46	76	70	73	54	12	10	M6 x 35	931	10.9	179	1,3
WLA035	33	750	45	80	75	79	62	12	12	M6 x 35	931	10.9	168	1,5
WLA035	35	900	51	80	75	79	62	12	12	M6 x 35	931	10.9	180	1,5
WLA035	37	1050	56	80	75	79	62	12	12	M6 x 35	931	10.9	190	1,5
WLA040	38	1250	65	98	80	84	71	30	8	M8 x 40	931	10.9	175	2,5
WLA040	40	1550	77	98	80	84	71	30	8	M8 x 40	931	10.9	184	2,5
WLA040	43	1850	86	98	80	84	71	30	8	M8 x 40	931	10.9	196	2,5
WLA050	44	2200	100	115	90	94	86	59	8	M10 x 45	931	10.9	189	4
WLA050	50	3300	132	115	90	94	86	59	8	M10 x 45	931	10.9	200	4
WLA050	54	3800	140	115	90	94	86	59	8	M10 x 45	931	10.9	212	4
WLA060	55	4050	147	125	120	124	98	59	10	M10 x 50	931	10.9	177	5,3
WLA060	60	5100	170	125	120	124	98	59	10	M10 x 50	931	10.9	190	5,3
WLA060	64	6100	190	125	120	124	98	59	10	M10 x 50	931	10.9	198	5,3
WLA070	65	6500	200	148	140	142	112	59	12	M10 x 60	931	10.9	172	8,4
WLA070	70	8200	234	148	140	142	112	59	12	M10 x 60	931	10.9	181	8,4
WLA070	74	9000	243	148	140	142	112	59	12	M10 x 60	931	10.9	188	8,4
WLA080	75	10500	280	170	170	175	130	100	12	M12 x 70	931	10.9	73	13,1
WLA080	80	12300	307	170	170	175	130	100	12	M12 x 70	931	10.9	186	13,1
WLA080	84	14000	333	170	170	175	130	100	12	M12 x 70	931	10.9	192	13,1
WLA090	85	14200	334	185	200	202	145	250	7	M16 x 80	931	10.9	166	17
WLA090	90	16400	364	185	200	202	145	250	7	M16 x 80	931	10.9	173	17
WLA090	94	18000	383	185	200	202	145	250	7	M16 x 80	931	10.9	177	17
WLA100	95	19100	402	200	210	215	158	250	9	M16 x 90	931	10.9	186	21
WLA100	100	23100	462	200	210	215	158	250	9	M16 x 90	931	10.9	191	21
WLA100	104	26000	500	200	210	215	158	250	9	M16 x 90	931	10.9	195	21
WLA110	105	28500	542	217	220	222	170	250	12	M16 x 90	931	10.9	214	27
WLA110	110	32000	581	217	220	222	170	250	12	M16 x 90	931	10.9	218	27
WLA110	114	35000	614	217	220	222	170	250	12	M16 x 90	931	10.9	221	27
WLA120	115	38500	669	235	230	235	184	250	13	M16 x 90	931	10.9	199	33
WLA120	120	43500	725	235	230	235	184	250	13	M16 x 90	931	10.9	200	33
WLA120	124	46000	742	235	230	235	184	250	13	M16 x 90	931	10.9	204	33
WLA130	125	47500	760	267	240	242	206	490	10	M20 x 110	931	10.9	196	45
WLA130	130	55000	846	267	240	242	206	490	10	M20 x 110	931	10.9	199	45
WLA130	134	58000	865	267	240	242	206	490	10	M20 x 110	931	10.9	202	45

WLA

Type mm	d_w mm	M_{max} Nm	F_{ax} kN	D mm	L mm	H mm	A mm	M_A mm	Z Pcs (2x)	S	DIN	Class	pw N/mm²	Weight Kg
WLA140	135	62000	918	280	250	252	218	490	11	M20 x 110	931	10.9	194	55
WLA140	140	67000	957	280	250	252	218	490	11	M20 x 110	931	10.9	196	55
WLA140	144	71000	986	280	250	252	218	490	11	M20 x 110	931	10.9	198	55
WLA150	145	73000	1006	302	265	267	230	490	12	M20 x 120	931	10.9	186	70
WLA150	150	78000	1040	302	265	267	230	490	12	M20 x 120	931	10.9	188	70
WLA150	154	82000	1065	302	265	267	230	490	12	M20 x 120	931	10.9	190	70
WLA160	155	82000	1058	315	280	285	242	490	13	M20 x 120	931	10.9	180	80
WLA160	160	88000	1100	315	280	285	242	490	13	M20 x 120	931	10.9	182	80
WLA160	165	97000	1175	315	280	285	242	490	13	M20 x 120	931	10.9	184	80
WLA180	166	108000	1301	345	310	312	265	490	16	M20 x 130	931	10.9	179	105
WLA180	180	132000	1465	345	310	312	265	490	16	M20 x 130	931	10.9	181	105
WLA180	185	140000	1513	345	310	312	265	490	16	M20 x 130	931	10.9	183	105
WLA200	186	153000	1645	375	350	355	295	490	20	M20 x 150	931	10.9	174	135
WLA200	200	184000	1840	375	350	355	295	490	20	M20 x 150	931	10.9	178	135
WLA200	210	204000	1943	375	350	355	295	490	20	M20 x 150	931	10.9	182	135
WLA220	211	214000	2028	410	390	392	320	840	18	M24 x 160	931	10.9	191	180
WLA220	220	240000	2180	410	390	392	320	840	18	M24 x 160	931	10.9	193	180
WLA220	230	260000	2260	410	390	392	320	840	18	M24 x 160	931	10.9	196	180
WLA240	231	280000	2424	435	430	435	350	840	20	M24 x 180	931	10.9	182	210
WLA240	240	305000	2540	435	430	435	350	840	20	M24 x 180	931	10.9	184	210
WLA240	250	334000	2672	435	430	435	350	840	20	M24 x 180	931	10.9	185	210
WLA260	251	390000	3108	515	450	452	380	1250	20	M27 x 200	931	10.9	204	345
WLA260	260	425000	3270	515	450	452	380	1250	20	M27 x 200	931	10.9	206	345
WLA260	270	465000	3444	515	450	452	380	1250	20	M27 x 200	931	10.9	208	345

TAS Schäfer GmbH • Osterfeldstraße 75 • 58300 Wetter

TAS
SCHÄFER

WLB

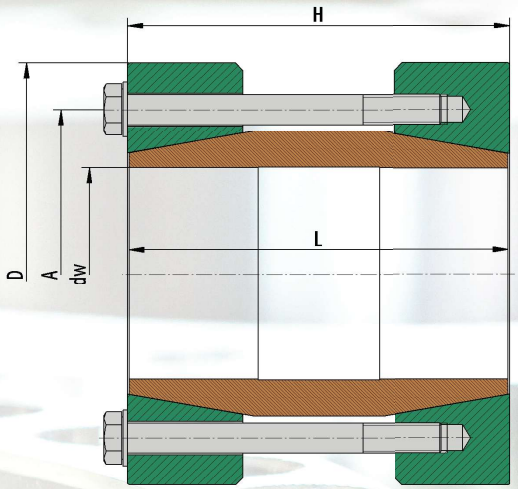

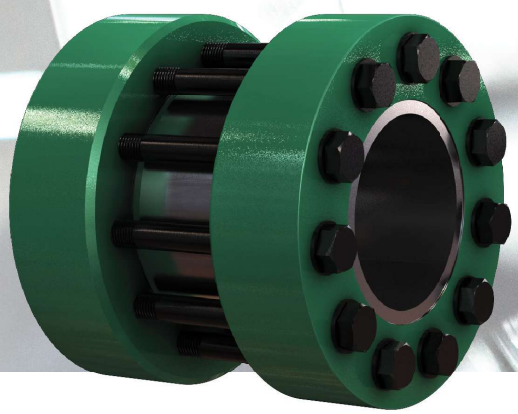

Used symbols		
d_w	[mm]	Shaft diameter
M_{max}	[Nm]	max. transmittable torque $F_{ax} = 0$
F_{ax}	[kN]	max. transmittable axial force $M_t = 0$
D	[mm]	Outer diameter of coupling
L	[mm]	Length of sleeve
H	[mm]	Width of shaft coupling
A	[mm]	Pitch circle diameter of bolting
M_A		Required tightening torque of clamping screws
Z		Number of screws
S		Size of screws
p_W	[N/mm²]	Average contact pressure on the shaft

Design of the disc	
d < 070	Discs lightly oiled without washers
d ≥ 070	Discs painted with washers

Dimensions H & e in unlocked position

Pos.	Designation
1	Sleeve
2	Pressure ring G
3	Pressure ring DG
4	Screw

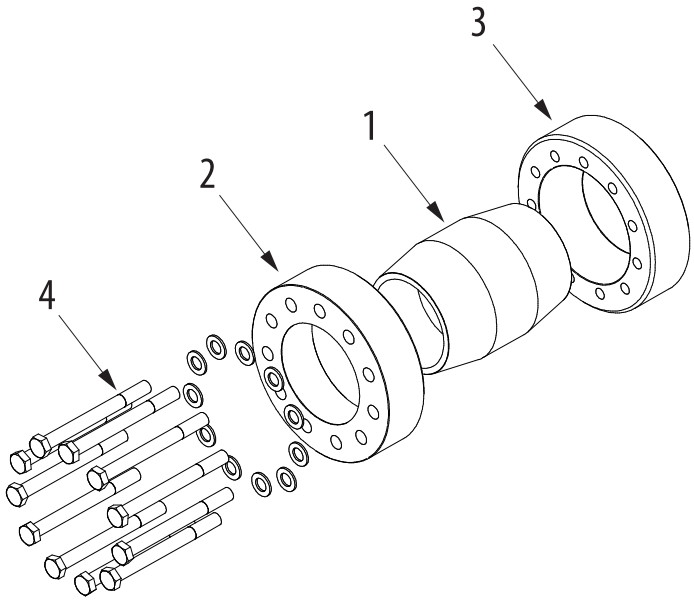

Ordering example: **TAS WLB-Typ/d/D** (e.g: TAS WLB200/150/200 ... further sizes on request)

WLB

Type mm	d_w mm	M_{max} Nm	F_{ax} kN	D mm	L mm	H mm	A mm	M_A mm	Z Pcs.	S	DIN	Class	pw N/mm²	Weight Kg
WLB015	13	70	11	55	50	53	37	6	7	M5 x 45	933	10.9	83	0,5
WLB015	15	150	20	55	50	53	37	6	7	M5 x 45	933	10.9	126	0,5
WLB015	17	180	21	55	50	53	37	6	7	M5 x 45	933	10.9	160	0,5
WLB020	18	200	22	60	54	57	42	12	8	M6 x 50	931	10.9	213	0,7
WLB020	20	270	27	60	54	57	42	12	8	M6 x 50	931	10.9	241	0,7
WLB020	22	350	31	60	54	57	42	12	8	M6 x 50	931	10.9	266	0,7
WLB025	23	370	32	66	62	65	48	12	8	M6 x 55	931	10.9	178	0,8
WLB025	25	470	37	66	62	65	48	12	8	M6 x 55	931	10.9	197	0,8
WLB025	27	600	44	66	62	65	48	12	8	M6 x 55	931	10.9	214	0,8
WLB030	28	540	38	76	70	73	54	12	10	M6 x 60	931	10.9	164	1,3
WLB030	30	670	44	76	70	73	54	12	10	M6 x 60	931	10.9	165	1,3
WLB030	32	750	46	76	70	73	54	12	10	M6 x 60	931	10.9	179	1,3
WLB035	33	750	45	80	75	79	62	12	12	M6 x 65	931	10.9	168	1,5
WLB035	35	900	51	80	75	79	62	12	12	M6 x 65	931	10.9	180	1,5
WLB035	37	1050	56	80	75	79	62	12	12	M6 x 65	931	10.9	190	1,5
WLB040	38	1250	65	98	80	84	71	30	8	M8 x 75	931	10.9	175	2,5
WLB040	40	1550	77	98	80	84	71	30	8	M8 x 75	931	10.9	184	2,5
WLB040	43	1850	86	98	80	84	71	30	8	M8 x 75	931	10.9	196	2,5
WLB050	44	2200	100	115	90	94	86	59	8	M10 x 80	931	10.9	189	4
WLB050	50	3300	132	115	90	94	86	59	8	M10 x 80	931	10.9	200	4
WLB050	54	3800	140	115	90	94	86	59	8	M10 x 80	931	10.9	212	4
WLB060	55	4050	147	125	120	124	98	59	10	M10 x 110	931	10.9	177	5,3
WLB060	60	5100	170	125	120	124	98	59	10	M10 x 110	931	10.9	190	5,3
WLB060	64	6100	190	125	120	124	98	59	10	M10 x 110	931	10.9	198	5,3
WLB070	65	6500	200	148	140	142	112	59	12	M10 x 120	931	10.9	172	8,4
WLB070	70	8200	234	148	140	142	112	59	12	M10 x 120	931	10.9	181	8,4
WLB070	74	9000	243	148	140	142	112	59	12	M10 x 120	931	10.9	188	8,4
WLB080	75	10500	280	170	170	175	130	100	12	M12 x 150	931	10.9	73	13,1
WLB080	80	12300	307	170	170	175	130	100	12	M12 x 150	931	10.9	186	13,1
WLB080	84	14000	333	170	170	175	130	100	12	M12 x 150	931	10.9	192	13,1
WLB090	85	14200	334	185	200	202	145	250	7	M16 x 180	931	10.9	166	17
WLB090	90	16400	364	185	200	202	145	250	7	M16 x 180	931	10.9	173	17
WLB090	94	18000	383	185	200	202	145	250	7	M16 x 180	931	10.9	177	17
WLB100	95	19100	402	200	210	215	158	250	9	M16 x 180	931	10.9	186	21
WLB100	100	23100	462	200	210	215	158	250	9	M16 x 180	931	10.9	191	21
WLB100	104	26000	500	200	210	215	158	250	9	M16 x 180	931	10.9	195	21
WLB110	105	28500	542	217	220	222	170	250	12	M16 x 190	931	10.9	214	27
WLB110	110	32000	581	217	220	222	170	250	12	M16 x 190	931	10.9	218	27
WLB110	114	35000	614	217	220	222	170	250	12	M16 x 190	931	10.9	221	27
WLB120	115	38500	669	235	230	235	184	250	13	M16 x 200	931	10.9	199	33
WLB120	120	43500	725	235	230	235	184	250	13	M16 x 200	931	10.9	200	33
WLB120	124	46000	742	235	230	235	184	250	13	M16 x 200	931	10.9	204	33
WLB130	125	47500	760	267	240	242	206	490	10	M20 x 200	931	10.9	196	45
WLB130	130	55000	846	267	240	242	206	490	10	M20 x 200	931	10.9	199	45
WLB130	134	58000	865	267	240	242	206	490	10	M20 x 200	931	10.9	202	45

WLB

Type mm	d_w mm	M_{max} Nm	F_{ax} kN	D mm	L mm	H mm	A mm	M_A mm	Z Pcs.	S	DIN	Class	pw N/mm²	Weight Kg
WLB140	135	62000	918	280	250	252	218	490	11	M20 x 210	931	10.9	194	55
WLB140	140	67000	957	280	250	252	218	490	11	M20 x 210	931	10.9	196	55
WLB140	144	71000	986	280	250	252	218	490	11	M20 x 210	931	10.9	198	55
WLB150	145	73000	1006	302	265	267	230	490	12	M20 x 220	931	10.9	186	70
WLB150	150	78000	1040	302	265	267	230	490	12	M20 x 220	931	10.9	188	70
WLB150	154	82000	1065	302	265	267	230	490	12	M20 x 220	931	10.9	190	70
WLB160	155	82000	1058	315	280	285	242	490	13	M20 x 230	931	10.9	180	80
WLB160	160	88000	1100	315	280	285	242	490	13	M20 x 230	931	10.9	182	80
WLB160	165	97000	1175	315	280	285	242	490	13	M20 x 230	931	10.9	184	80
WLB180	166	108000	1301	345	310	312	265	490	16	M20 x 250	931	10.9	179	105
WLB180	180	132000	1465	345	310	312	265	490	16	M20 x 250	931	10.9	181	105
WLB180	185	140000	1513	345	310	312	265	490	16	M20 x 250	931	10.9	183	105
WLB200	186	153000	1645	375	350	355	295	490	20	M20 x 280	931	10.9	174	135
WLB200	200	184000	1840	375	350	355	295	490	20	M20 x 280	931	10.9	178	135
WLB200	210	204000	1943	375	350	355	295	490	20	M20 x 280	931	10.9	182	135
WLB220	211	214000	2028	410	390	392	320	840	18	M24 x 320	931	10.9	191	180
WLB220	220	240000	2180	410	390	392	320	840	18	M24 x 320	931	10.9	193	180
WLB220	230	260000	2260	410	390	392	320	840	18	M24 x 320	931	10.9	196	180
WLB240	231	280000	2424	435	430	435	350	840	20	M24 x 340	931	10.9	182	210
WLB240	240	305000	2540	435	430	435	350	840	20	M24 x 340	931	10.9	184	210
WLB240	250	334000	2672	435	430	435	350	840	20	M24 x 340	931	10.9	185	210
WLB260	251	390000	3108	515	450	452	380	1250	20	M27 x 360	931	10.9	204	345
WLB260	260	425000	3270	515	450	452	380	1250	20	M27 x 360	931	10.9	206	345
WLB260	270	465000	3444	515	450	452	380	1250	20	M27 x 360	931	10.9	208	345